Libec LX5M System with mid-level spreader

System	H38DVB (Head) + RT30B (Tripod) + BR-2B (Mid-level spreader) + FP-2B (Large rubber feet) + RC-20 (Carrying case)		
Payload	5 kg / 11.0 lb	Tilt angle	+90° / -80°
Weight	5.2 kg / 11.4 lb	Pan angle	360°
Height	① H : 1655 mm W : 800 mm (※Reference)	Counterbalance	FIX
	② H : 810 mm W : 570 mm (〃)	Drag mode	FIX
Folded length	③ L : 855 mm (〃)	Temperature range	-20 ℃ ～ +60 ℃ / -4 ℉ ～ +140 ℉
Camera plate (Sliding range)	Sliding plate	Ball diameter	φ75 mm
	±40 mm / ±1.6″	Section	2STAGE (Material : Aluminum)
Plate attachment (Screw sliding range)	1/4-20UNC screw + video pin	Tripod fixation	Fixing lock knob
	76 mm / 3″	Spreader	BR-2B (Telescopic , Removable)
Spare screw	---	Pan handle	PH-5B
	---	Case material	Nylon

Remarks

■Exterior Dimensions (mm)

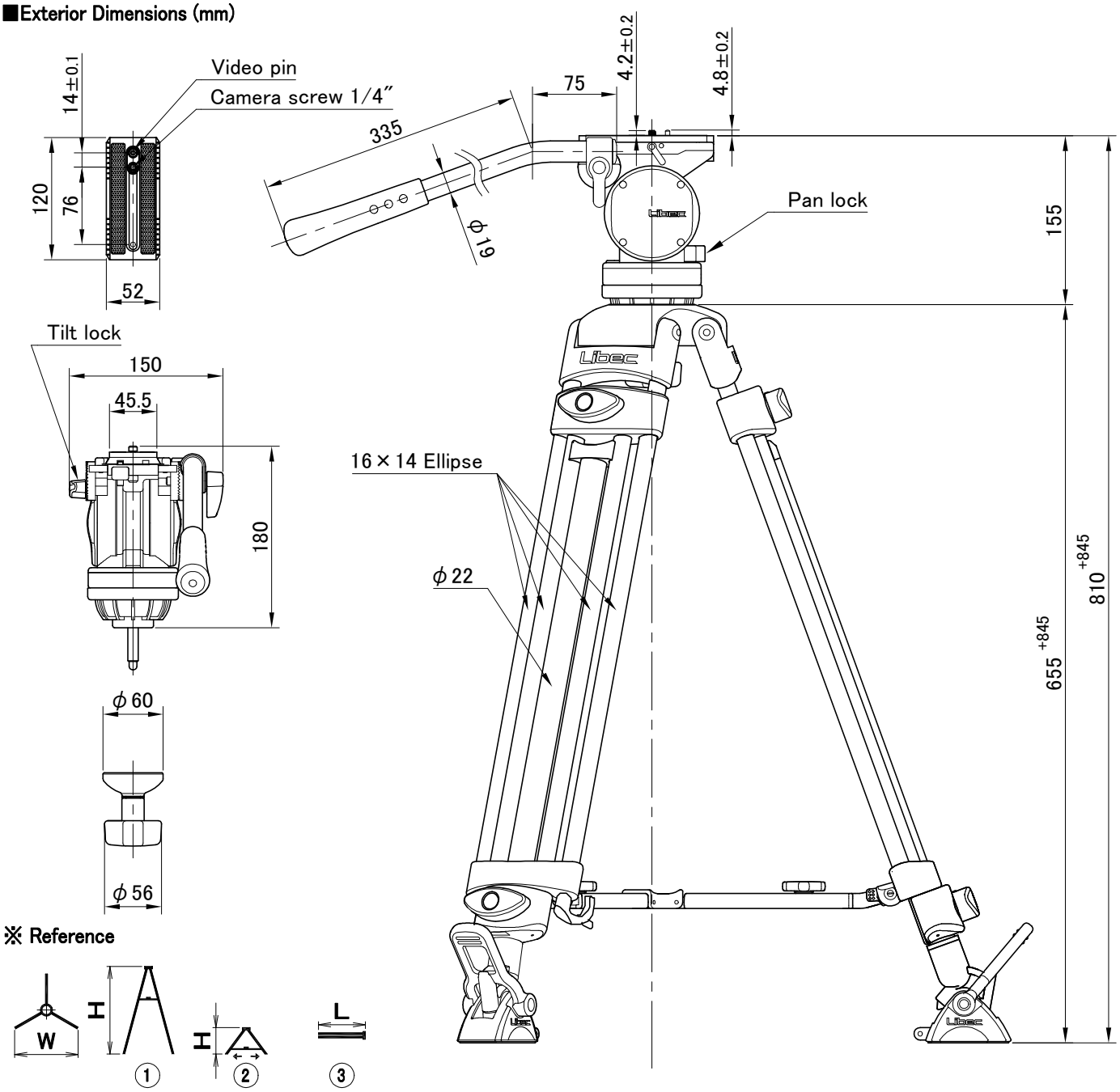

Manufacturer : HEIWA SEIKI KOGYO CO., LTD.
978-1, Nishibukuro, Yashio-City, Saitama, 340-0833 Japan TEL . +81-48-995-1301 FAX . +81-48-997-0804 http://www.libec-global.com

2108
DWG.NO.:50-00059-E