Libec HS-350 System with floor spreader

System	H35 (Head) + RT30B (Tripod) + SP-2B (Floor spreader) + RC-30 (Carrying case)		
Payload	8 kg / 17.6 lb	Tilt angle	+90° / -70° (Limited to ±40° with maximum counterbalance)
Weight	6.3 kg / 13.9 lb	Pan angle	360°
Height	① H : 1662 mm W : 710 mm (※Reference)	Counterbalance	Range : 3 ~ 7.5 kg / 6.6 ~ 16.5 lb (C.G. 100 mm)
	② H : 562 mm W : 1105 mm (〃)		Perfect Balance
Folded length	③ L : 857 mm (〃)		Continuous Counterbalance with Illuminated Meter
Camera plate	2 Sliding plates (compatible with Manfrotto and Sachtler)	Drag mode	Free plus 3 steps
	One touch attach and release mechanism	Drag system	Multilayered Metal Structure
(Sliding range)	Standard : ±30 mm / ±1.2″ , Long : ±85 mm / ±3.3″	Temperature range	-40 ℃ ~ +60 ℃ / -40℉ ~ +140℉
Plate attachment	Standard : 1/4-20UNC (with video boss)	Head base	Ball 75 mm / Flat base with 3/8″female thread
	Long : 1/4-20UNC × 1 , 3/8-16UNC × 2	Accessory port	Screw hole 1/4″ × 1 , 3/8″ × 1
(Screw sliding range)	Standard : 68 mm / 2.6″ , Long : 85 mm / 3.3″	Section	2-Stage
Spare screw	1/4-20UNC × 1 , 3/8-16UNC × 1	Tripod fixation	Fixing lock knob
	Equipped on the top of the head (beneath sliding plate)	Spreader	SP-2B (Telescopic , Removable)
Bubble level	Illuminated	Pan handle	PH-6B (Telescopic)
		Case material	Nylon , Polyester , TPE , PE , PP , POM

Remarks

■Exterior Dimensions (mm)

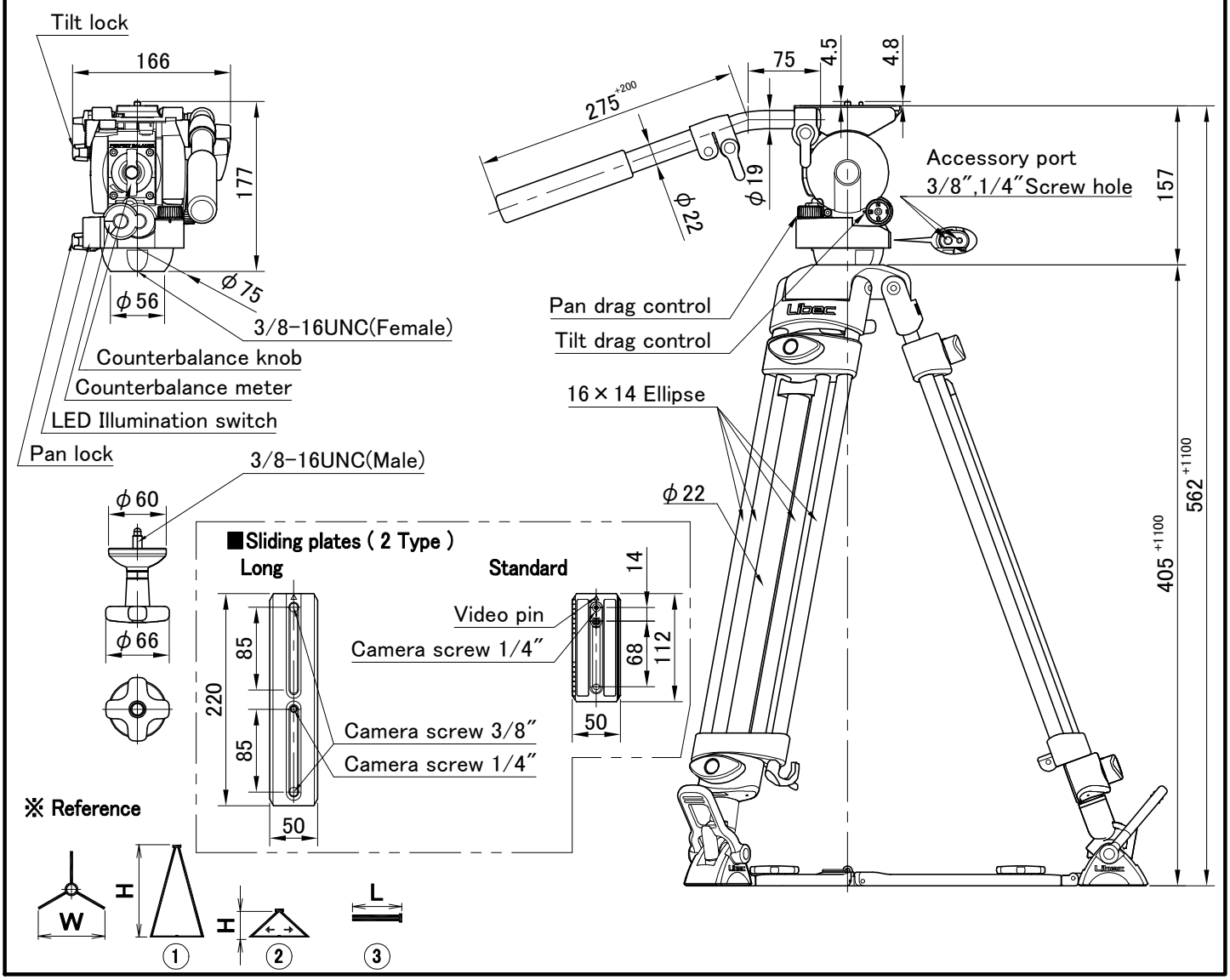

Manufacturer : HEIWA SEIKI KOGYO CO., LTD.
978-1, Nishibukuro, Yashio-City, Saitama, 340-0833 Japan TEL . +81-48-995-1301 FAX . +81-48-997-0804 http://www.libec-global.com

2204
DWG.NO.:50-00108-E