Libec NX-300MQ System with mid-level spreader

System	NH30 (Head) + QL40B (Tripod) + BR-2B (Mid-level spreader) + FP-1B (Large rubber feet) + RC-40 (Carrying case)		
Payload	10 kg / 22.0 lb	Tilt angle	+90° / −70°
Weight	4.9 kg / 10.8 lb	Pan angle	360°
Height	① H : 1975 mm W : 780 mm (※Reference)	Counterbalance	Range : 0 ～ 10 kg / 0 ～ 22 lb (C.G. 55 mm)
	② H : 910 mm W : 550 mm (〃)		System: free plus 5 steps
Folded length	③ L : 944 mm (〃)	Drag mode	Free plus 3 steps
Camera plate	2 Sliding plates (compatible with Manfrotto and Sachtler)	Drag system	Multilayered Metal Structure
	One touch attach and release mechanism	Temperature range	−40°C ～ +60°C / −40°F ～ +140°F
(Sliding range)	Standard : ±30 mm / ±1.2″ , Long : ±85 mm / ±3.3″	Head base	Ball 75 mm / Flat base with 3/8″female thread
Plate attachment	Standard : 1/4-20UNC (with video boss)	Carrying handle	Included
	Long : 1/4-20UNC × 1 , 3/8-16UNC × 2	Section	2-Stage
(Screw sliding range)	Standard : 68 mm / 2.6″ , Long : 85 mm / 3.3″	Leg lock system	Flip lock
Spare screw	1/4-20UNC × 1 , 3/8-16UNC × 1	Spreader	BR-2B (Telescopic , Removable)
	Equipped on the top of the head (beneath sliding plate)	Pan handle	Dedicated pan handle
Accessory port	1/4″ and 3/8″ screw holes (head : 1 set , tripod : 3 sets)	Case material	Nylon , Polyester , TPE , PE , PP , POM

Remarks

＊Includes adjustment tool.

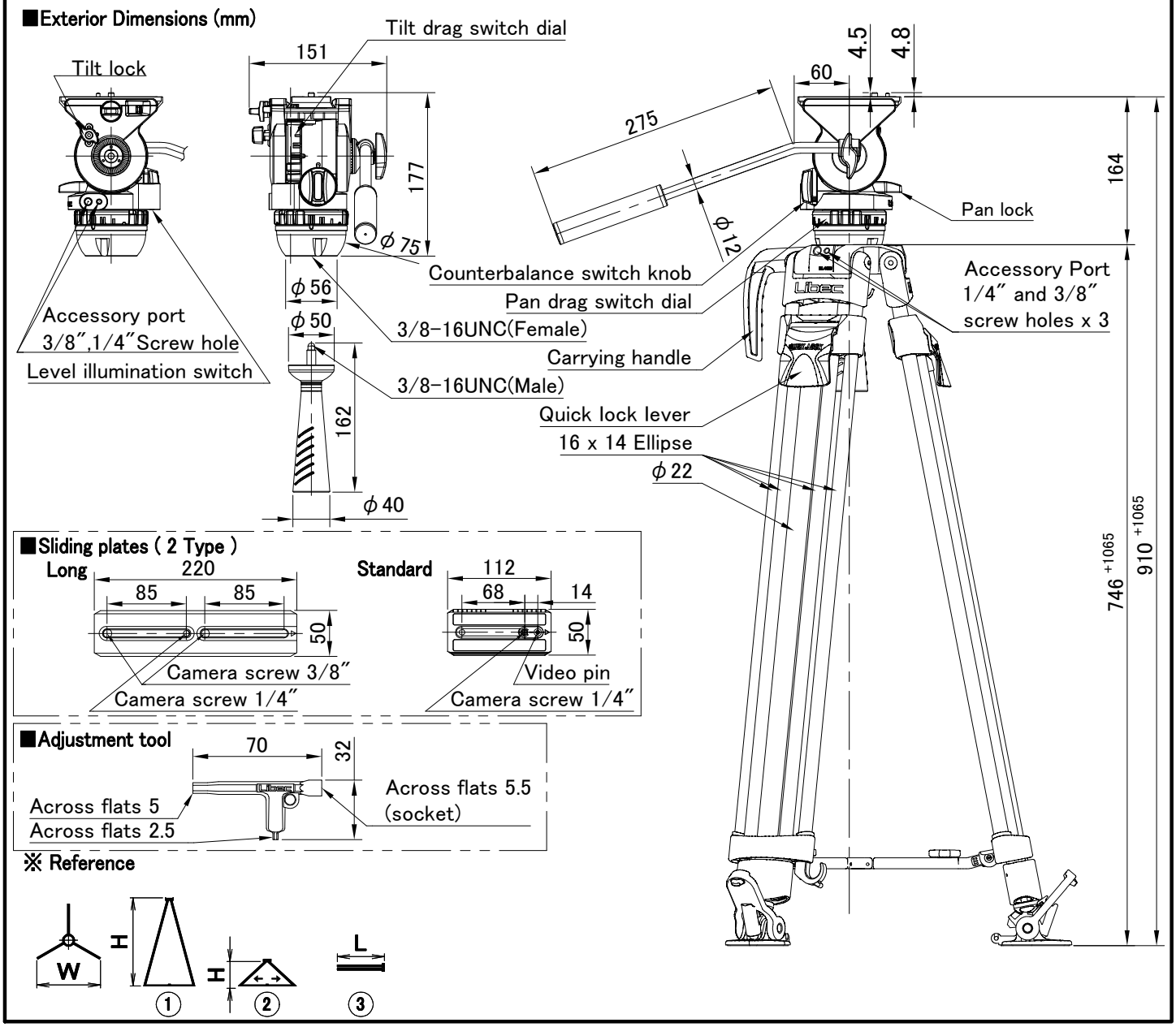

Manufacturer : HEIWA SEIKI KOGYO CO., LTD.
978-1, Nishibukuro, Yashio-City, Saitama, 340-0833 Japan TEL . +81-48-995-1301 FAX . +81-48-997-0804 http://www.libec-global.com

2501
DWG.NO.:50-00124-E