NH30

System	NH30 (Head)		
Payload	10 kg / 22.04 lb	Tilt angle	+90° / −70°
Weight	1.8 kg / 39.68 lb	Pan angle	360°
Camera plate	2 Sliding plates (Standard + Long)	Counterbalance	Loading range : 0 ~ 10 kg / 0 ~ 22 lb (CG 55 mm)
	Compatible with Manfrotto and Sachtler		System: 0 + 5 STEP
(Sliding range)	Standard : ±30 mm / ±1.2″ , Long : ±85 mm / ±3.3″	Drag mode	Tilt : 0 + 3 STEP
Plate attachment	Standard : 1/4-20UNC + Video pin		Pan : 0 + 3 STEP
	Long : 1/4-20UNC × 1 , 3/8-16UNC × 2	Drag mechanism	Metal lamination unit
(Screw sliding range)	Standard : 68 mm / ±2.6″ , Long : 85 mm / ±3.3″	Temperature range	−40 ℃ ~ +60 ℃ / −40℉ ~ +140℉
Spare screw	1/4-20UNC × 1 , 3/8-16UNC × 1	Head base	Ball 75 mm / Flat bese
	Equipped on the top of the head (beneath sliding plate)	Accessory port	Left side of head : Screw hole 1/4″ × 1 , 3/8″ × 1
Bubble level	Illuminated	Pan handle	Dedicated pan handle

Remarks

■Exterior Dimensions (mm)

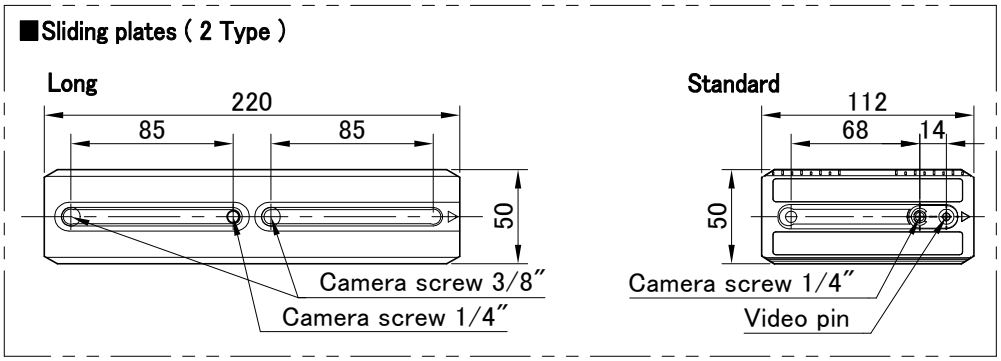

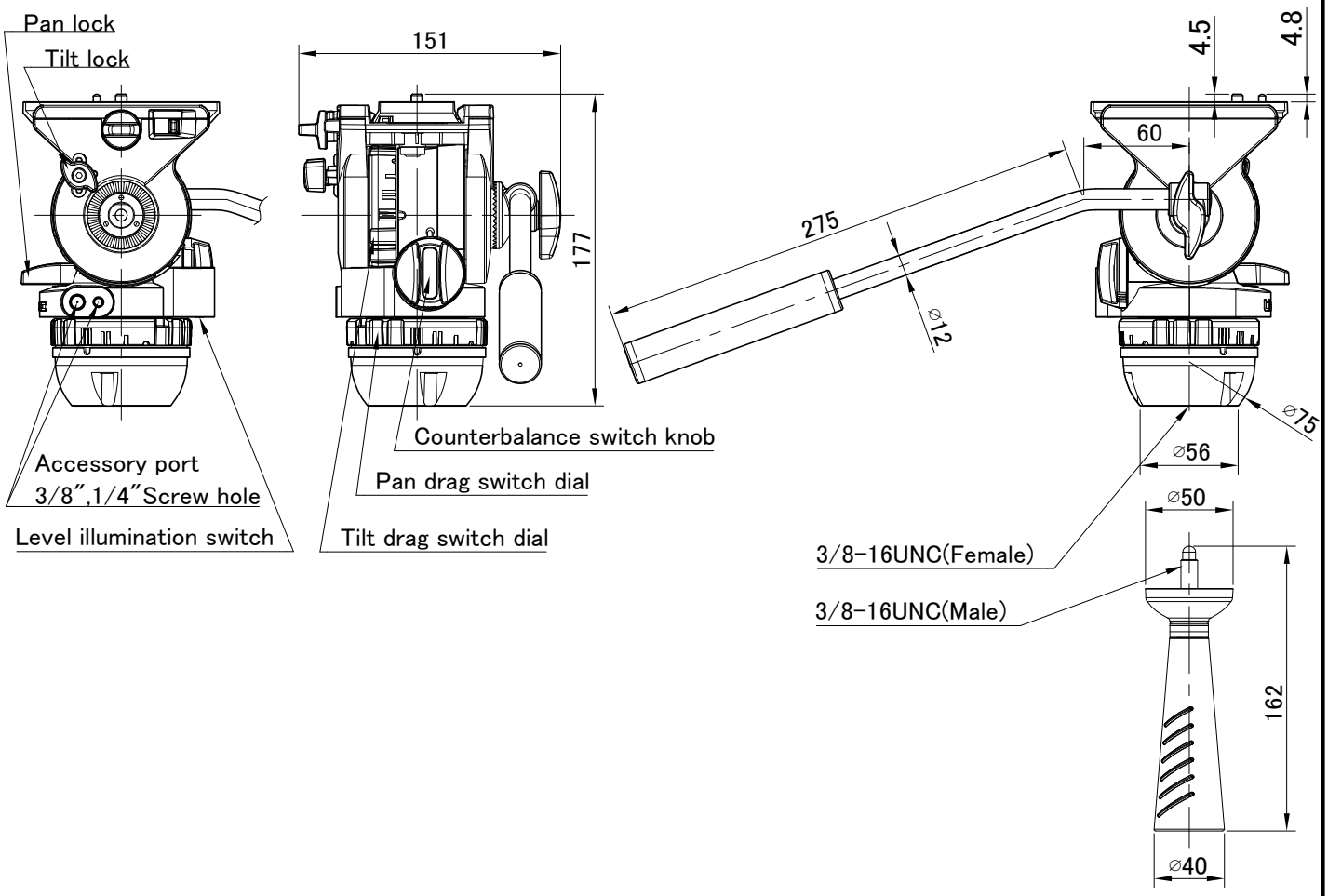

Manufacturer : HEIWA SEIKI KOGYO CO., LTD.
978-1, Nishibukuro, Yashio-City, Saitama, 340-0833 Japan TEL . +81-48-995-1301 FAX . +81-48-997-0804 http://www.libec-global.com

2012
DWG.NO.:50-10042-E