LX10M System with mid-level spreader

System	H65B (Head) + RT50B (Tripod) + BR-6B (Mid-level spreader) + FP-2B (Large rubber feet) + RC-50 (Carrying case)		
Payload	16 kg / 35.3 lb	Tilt angle	+85° / −65°
Weight	7.4 kg / 16.3 lb	Pan angle	360°
Height	① H : 1715 mm W : 900 mm (※Reference)	Counterbalance	FIX
	② H : 830 mm W : 670 mm (〃)	Drag mode	Both tilt and pan 2 STEP
Folded length	③ L : 895 mm (〃)	Temperature range	−20 ℃ ～ +60 ℃ / −4 ℉ ～ +140 ℉
Camera plate (Sliding range)	Sliding plate	Ball diameter	φ100 mm
	±50 mm / ±2″	Section	2STAGE (Material : Aluminum)
Plate attachment (Screw sliding range)	3/8-16UNC screw	Tripod fixation	Fixing lock knob
	100 mm / 4″	Spreader	BR-6B (Telescopic , Removable)
Spare screw	3/8-16UNC screw	Pan handle	PH-8B
	Equipped on the top of the head (beneath sliding plate)	Case material	Nylon

Remarks

■Exterior Dimensions (mm)

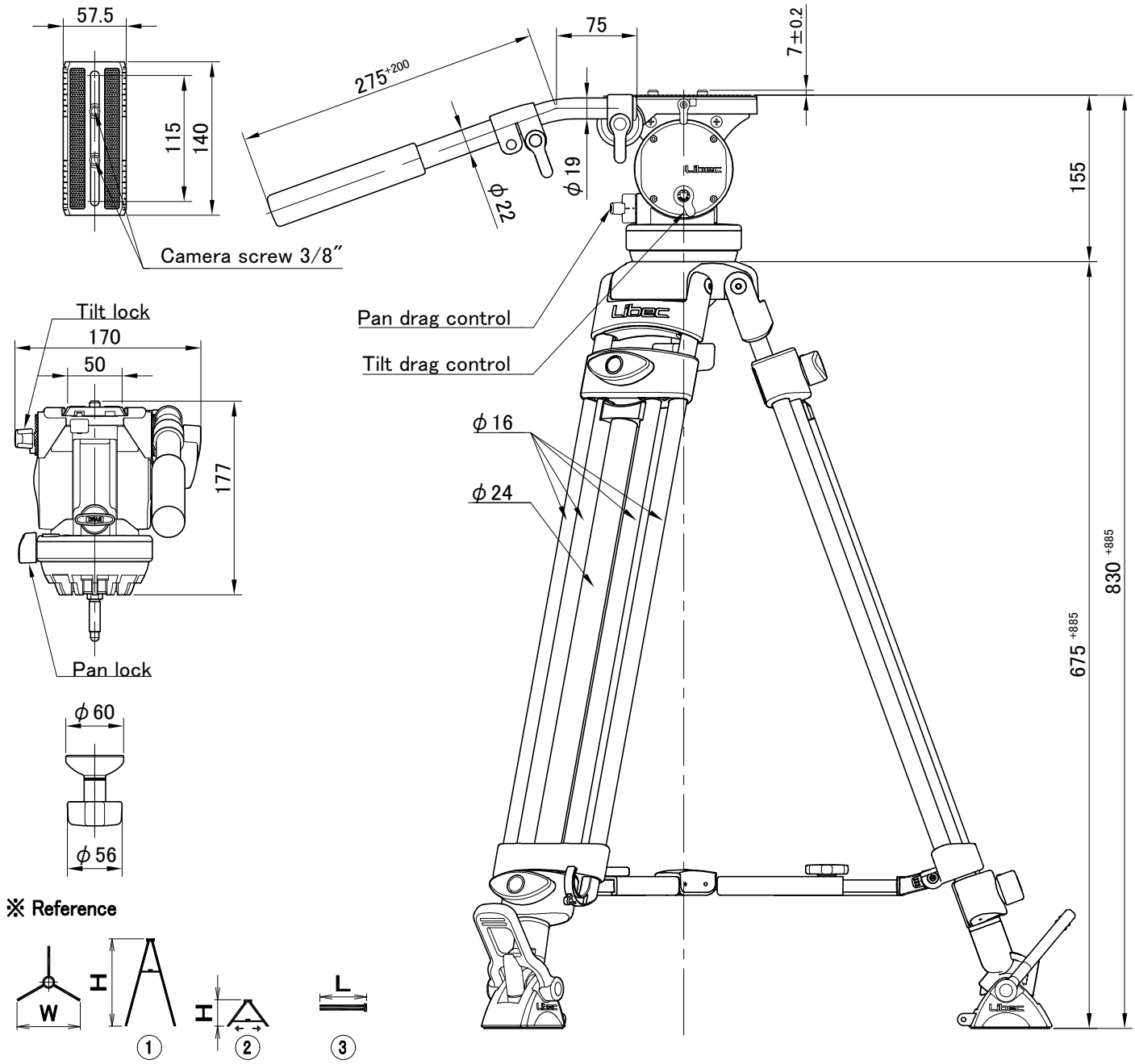

Manufacturer : HEIWA SEIKI KOGYO CO., LTD.
978-1, Nishibukuro, Yashio-City, Saitama, 340-0833 Japan TEL . +81-48-995-1301 FAX . +81-48-997-0804 http://www.libec-global.com

2108
DWG.NO.:50-00063-E