Libec HS-250MQ System with mid-level spreader

System	H25 (Head) + QL40B (Tripod) + BR-2B (Mid-level spreader) + FP-1B (Large rubber feet) + RC-40 (Carrying case)		
Payload	5 kg / 11.0 lb	Tilt angle	+90° / -70° (Limited to ±50° with maximum counterbalance)
Weight	5.9 kg / 13.0 lb	Pan angle	360°
Height	① H : 1975 mm W : 780 mm (※Reference)	Counterbalance	Range : 1.7 ~ 4.5 kg / 3.7 ~ 9.9 lb (C.G. 100 mm)
	② H : 910 mm W : 550 mm (〃)		Perfect Balance
Folded length	③ L : 944 mm (〃)		Continuous Counterbalance with Illuminated Meter
Camera plate	Sliding plate (compatible with Manfrotto and Sachtler)	Drag mode	Free plus 3 steps
	One touch attach and release mechanism	Drag system	Multilayered Metal Structure
(Sliding range)	±30 mm / ±1.2″	Temperature range	-40°C ~ +60°C / -40°F ~ +140°F
Plate attachment	1/4-20UNC (with video boss)	Head base	Ball 75 mm / Flat base with 3/8″female thread
(Screw sliding range)	68 mm / 2.6″	Carrying handle	Included
Spare screw	1/4-20UNC × 1 , 3/8-16UNC × 1	Section	2-Stage
	Equipped on the top of the head (beneath sliding plate)	Leg lock system	Flip lock
Bubble level	Illuminated	Spreader	BR-2B (Telescopic , Removable)
Accessory port	1/4″ and 3/8″ screw holes (head : 1 set , tripod : 3 sets)	Pan handle	PH-6B (Telescopic)
		Case material	Nylon , Polyester , TPE , PE , PP , POM

Remarks

＊Includes adjustment tool.

■Exterior Dimensions (mm)

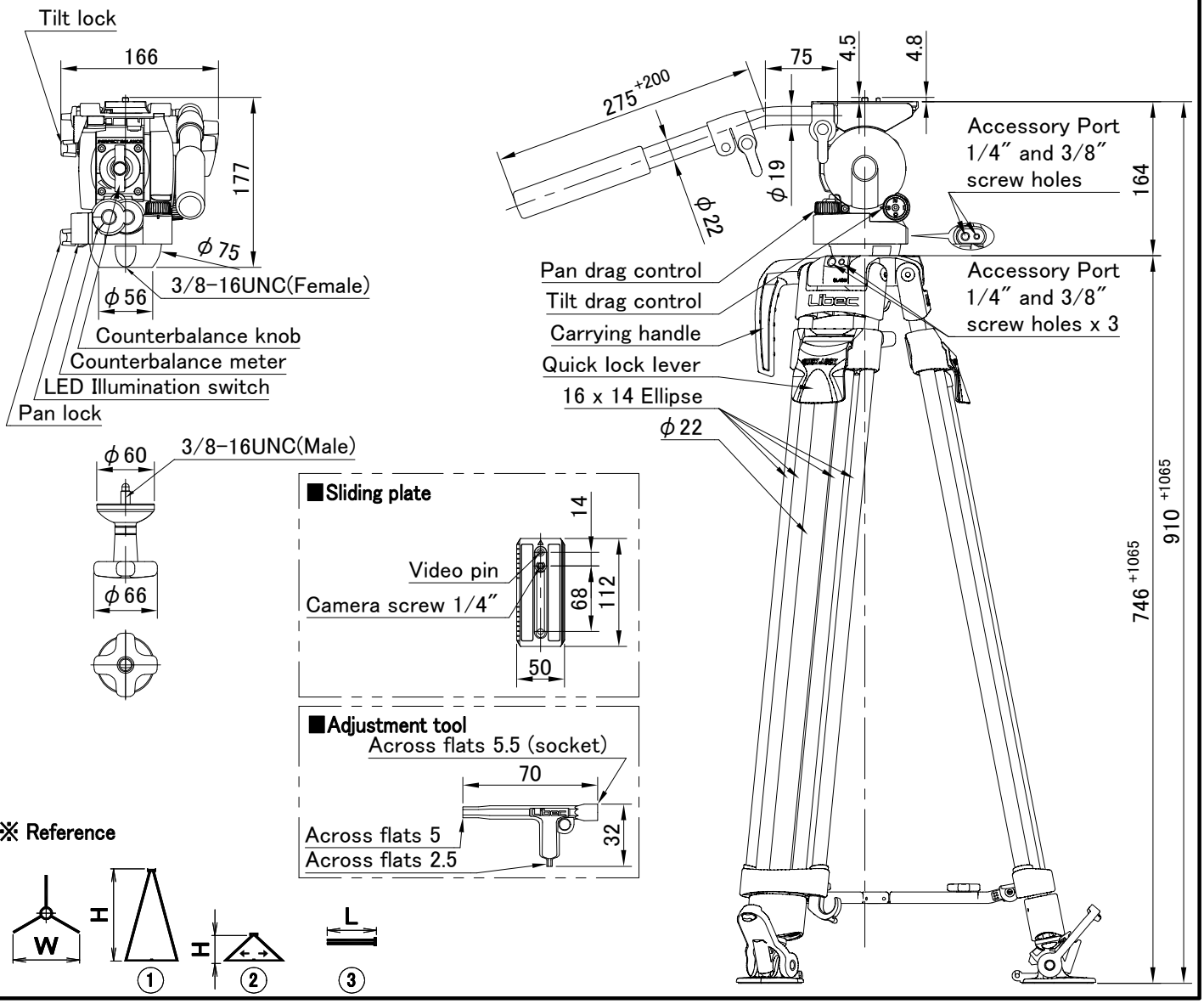

Manufacturer : HEIWA SEIKI KOGYO CO., LTD.
978-1, Nishibukuro, Yashio-City, Saitama, 340-0833 Japan TEL . +81-48-995-1301 FAX . +81-48-997-0804 http://www.libec-global.com

2501
DWG.NO.:50-00118-E