Libec GS-750Q

System	GH75 (Head) + QL60B (Tripod) + SP-2B (Floor spreader) + RC-70 (Carrying case)		
Payload	17 kg / 37.5 lb	Tilt angle	+90° / -70° (Limited to ±40° with max counterbalance)
Weight	8.4 kg / 18.5 lb	Drag mode	Free plus 7 steps
Operating Dimensions	① H : 1755 mm / 69.1″ W : 710 mm / 28″ (※ Reference)	Temperature range	-40 ℃ ～ +60 ℃ / -40 ˚F ～ +140 ˚F
	② H : 630 mm / 24.8″ W : 1110 mm / 43.7″ (〃)	Accessory port	1/4″ and 3/8″ screw holes (Head : 1set , Tripod : 3sets)
Folded length	③ L : 895 mm / 35.2″ (〃)	Head attachment	100 mm bowl
Camera plate (Sliding range)	Sliding plate	Carrying handle	Included
	±55 mm / ±2.2″	Leg pipe	Aluminum pipe , 2-Stage
Counterbalance	Range : 5.5 ～ 14 kg / 12 ～ 31 lb (C.G. 125 mm)	Leg lock system	Flip lock
	Perfect Balance	Spreader	SP-2B (Telescopic , Removable)
	Continuous counterbalance with meter	Case material	Nylon , Polyester , TPE , PE , PP

Remarks

※ Includes adjustment tool

■Exterior Dimensions (mm)

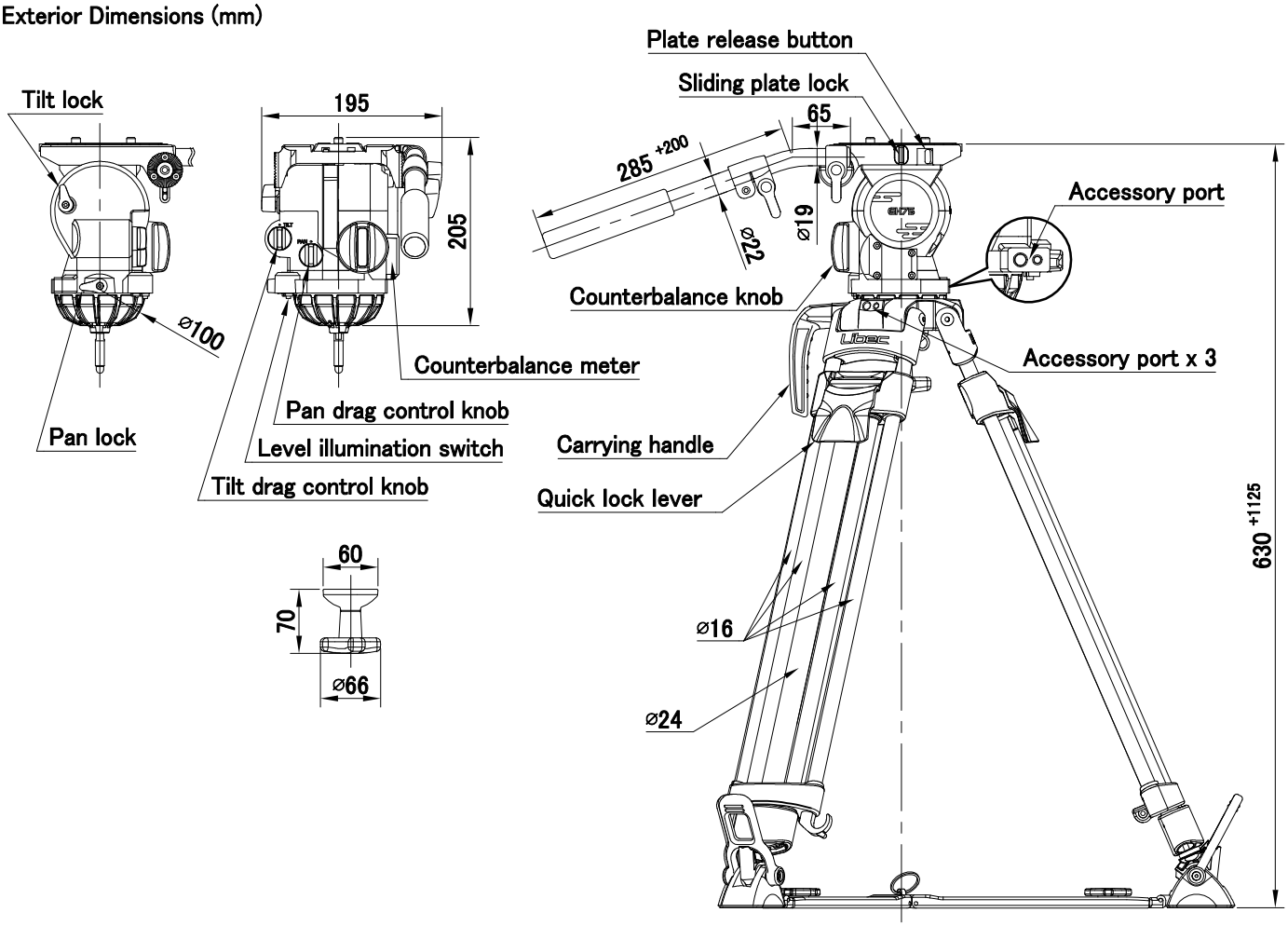

※ Reference

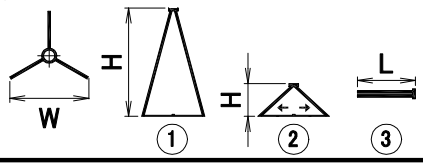

■Sliding plate

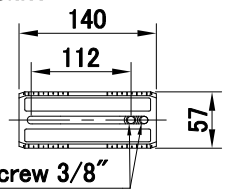

■Adjustment tool

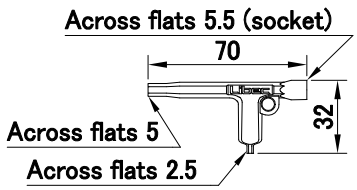

Manufacturer : HEIWA SEIKI KOGYO CO., LTD.
978-1, Nishibukuro, Yashio-City, Saitama, 340-0833 Japan TEL . +81-48-995-1301 FAX . +81-48-997-0804 http://www.libec-global.com

2604
DWG NO.50-00151-E