# QH3 SERVICE PARTS

2107
DWG.No.:51-10050-E1(1)

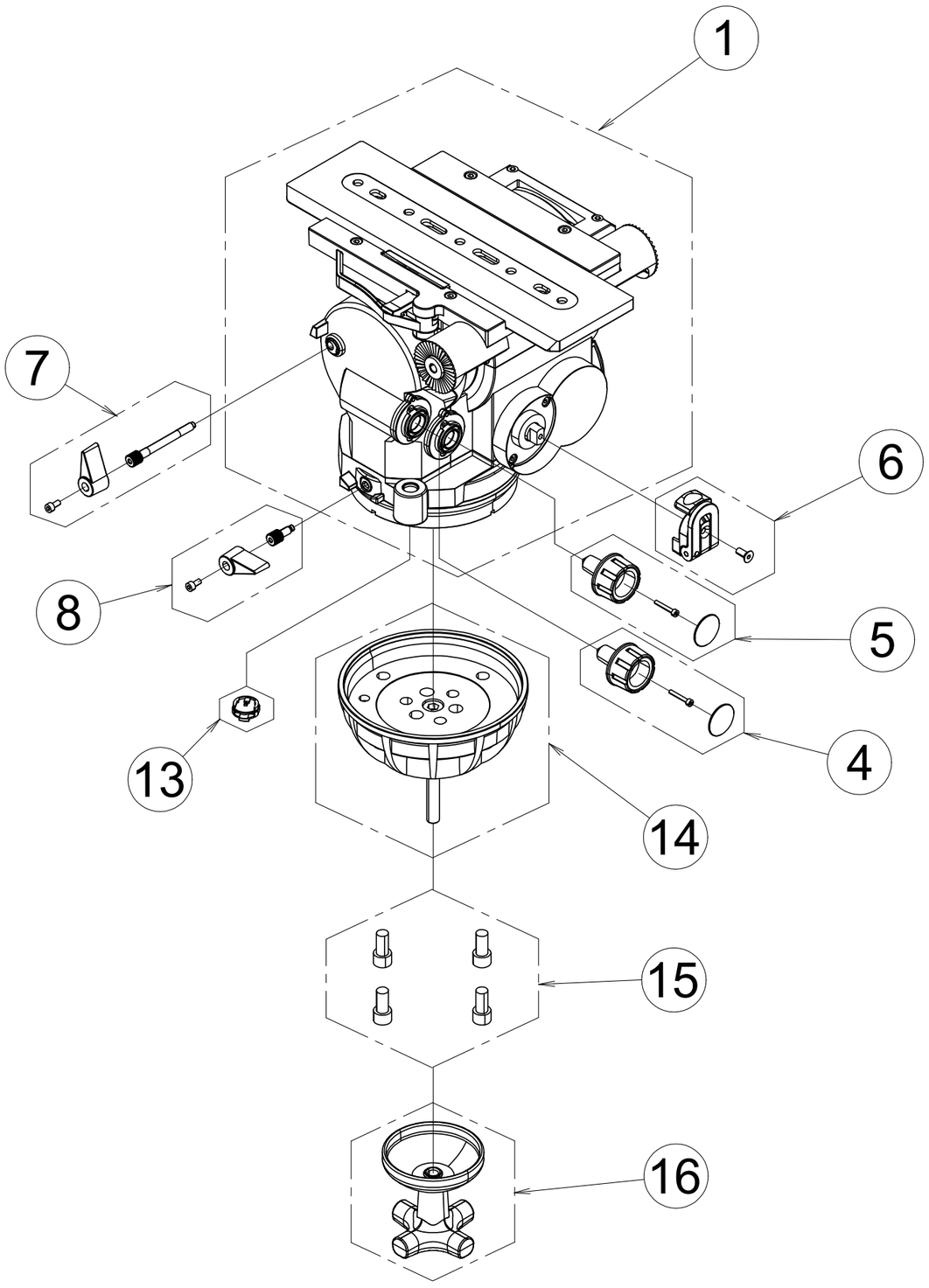


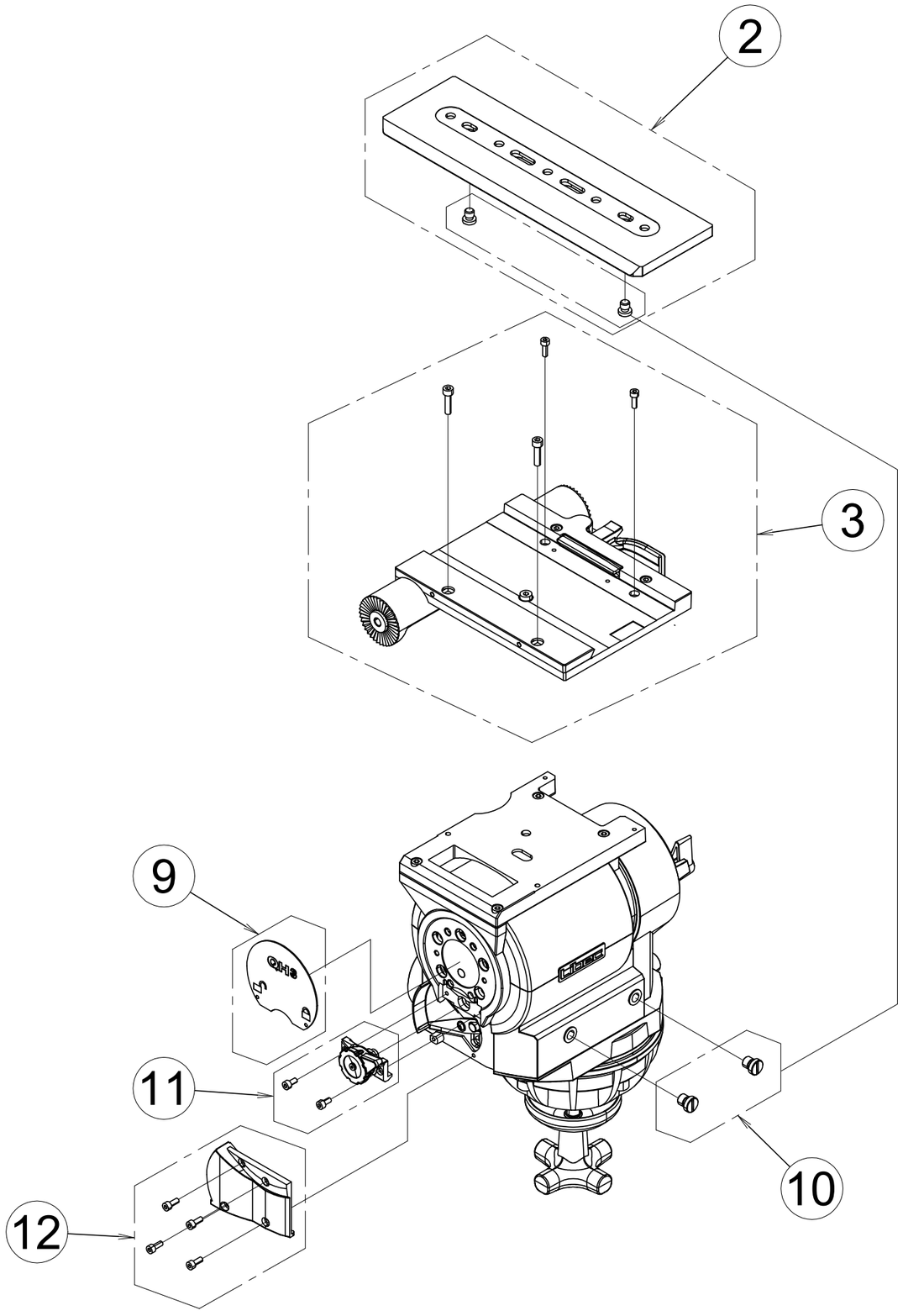

# QH3 SERVICE PARTS

| No. | PART No. | DESCRIPTION | Q'TY USED | NOTE |
|---|---|---|---|---|
| 1 | QH3-1 | Head assembly | | |
| 2 | QH3-2 | Sliding plate | 1 | |
| 3 | QH3-3 | Camera platform assembly | 1 | |
| 4 | QH3-4 | Tilt drag control | 1 | |
| 5 | QH3-5 | Pan drag control | 1 | |
| 6 | QH3-6 | CB knob | 1 | |
| 7 | QH3-7 | Tilt lock | 1 | |
| 8 | QH3-8 | Pan lock | 1 | |
| 9 | QH3-9 | Tilt support right plate | 1 | |
| 10 | QH3-10 | Camera screw (3/8-16 UNC) | 4 | |
| 11 | QH3-11 | H-lock knob | 1 | |
| 12 | QH3-12 | Indicator cover | 1 | |
| 13 | QH3-13 | LED module | 1 | |
| 14 | QH3-14 | Ball leveler | 1 | |
| 15 | QH3-15 | Ball leveler fixing screw (3/8-16 UNC) | 4 | |
| 16 | QH3-16 | Bowl clamp | 1 | |