QH1 SERVICE PARTS

2107
DWG.No.:51-10049-E1(1)

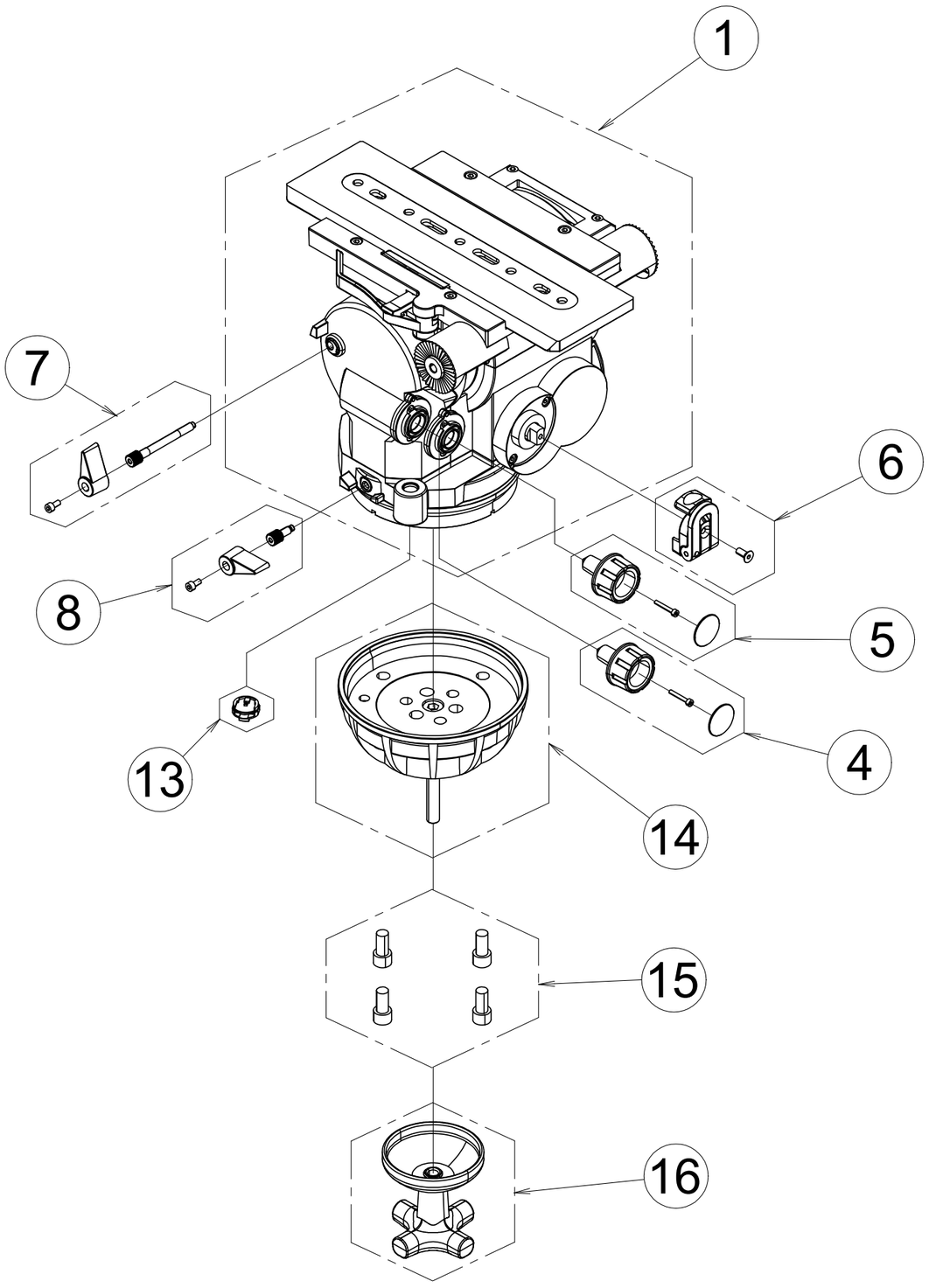

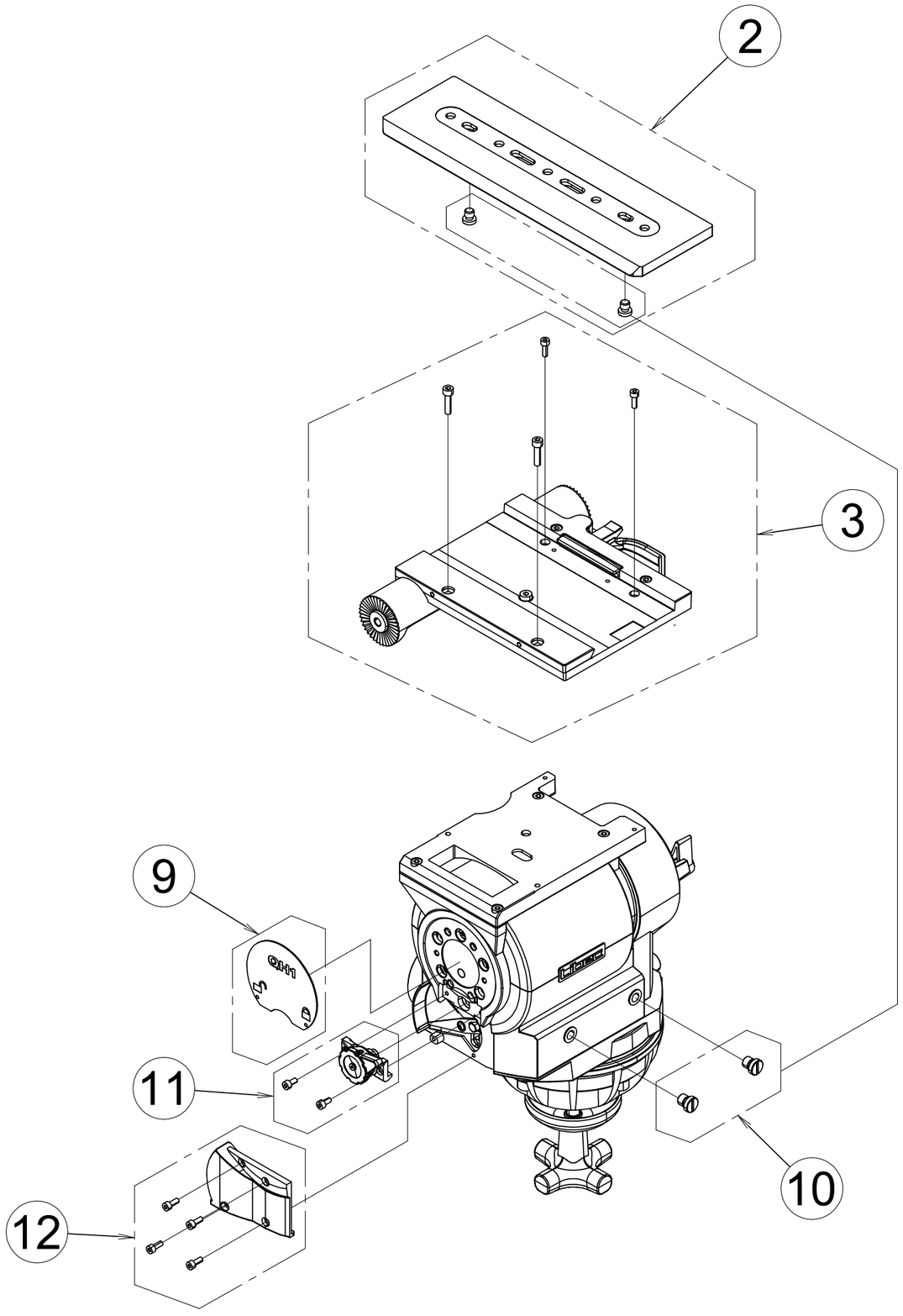

QH1 SERVICE PARTS

No.	PART No.	DESCRIPTION	Q'TY USED	NOTE
1	QH1-1	Head assembly		
2	QH1-2	Sliding plate	1	
3	QH1-3	Camera platform assembly	1	
4	QH1-4	Tilt drag control	1	
5	QH1-5	Pan drag control	1	
6	QH1-6	CB knob	1	
7	QH1-7	Tilt lock	1	
8	QH1-8	Pan lock	1	
9	QH1-9	Tilt support right plate	1	
10	QH1-10	Camera screw (3/8-16 UNC)	4	
11	QH1-11	H-lock knob	1	
12	QH1-12	Indicator cover	1	
13	QH1-13	LED module	1	
14	QH1-14	Ball leveler	1	
15	QH1-15	Ball leveler fixing screw (3/8-16 UNC)	4	
16	QH1-16	Bowl clamp	1	