GH75 SERVICE PARTS

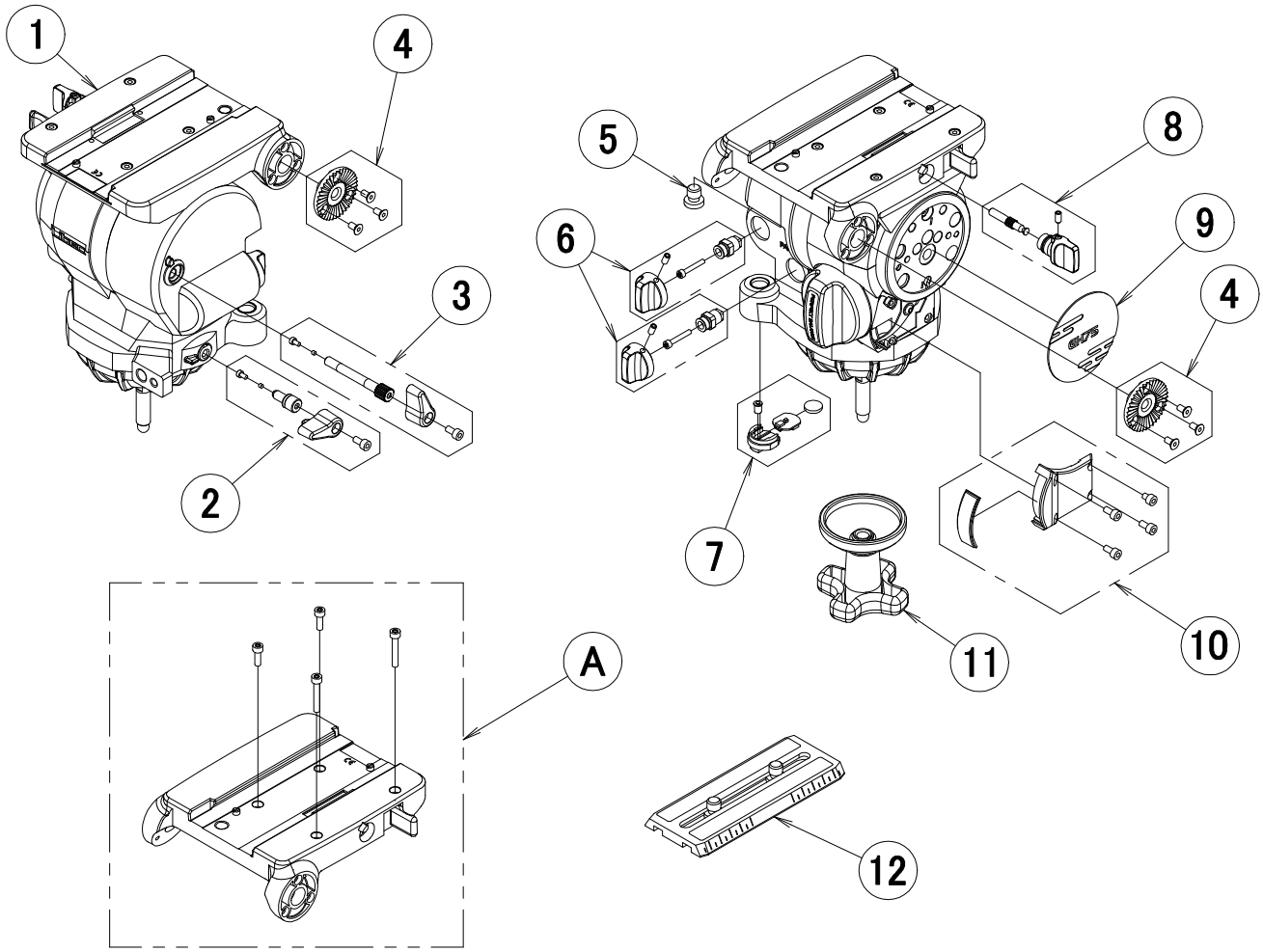

No.	PART No.	DESCRIPTION	QTY USED PER PROD	NOTE
1	GH75-1	Head assembly		
2	GH75-2	Pan lock knob set	1	
3	GH75-3	Tilt lock knob set	1	
4	GH75-4	Serration	2	
5	GH75-5	Camera screw (3/8-16 UNC)	3	
6	GH75-6	Drag control	2	
7	GH75-7	LED assembly	1	
8	GH75-8	Sliding plate lock	1	
9	GH75-9	Logo plate	1	
10	GH75-10	Meter cover	1	
11	GH75-11	Bowl clamp	1	
12	GH75-12	Sliding plate	1	
A	GH75-A	Camera platform assembly	1	

【Remarks】

There are two screw lengths for No. 11 and No. A, please assemble them referring to the illustration.