Libec T102 with floor spreader

System	T102 (Tripod)+SP-6 (Floor spreader)		
Payload	90 kg / 198 lb	Ball diameter	ϕ100 mm
Weight	6.5 kg / 14.3 lb	Section	1STAGE
Height	① H : 1385 mm W: 730 mm (※Reference)	Tripod fixation	Fixing lock knob
	② H : 690 mm W: 1125 mm (〃)	Spreader	SP-6 (Telescopic, Removable)
Folded length	③ L : 880 mm (〃)	Material	Aluminum pipe, Aluminum alloy, Engineering plastic

Remarks

■Exterior Dimensions (mm)

■ SP-6

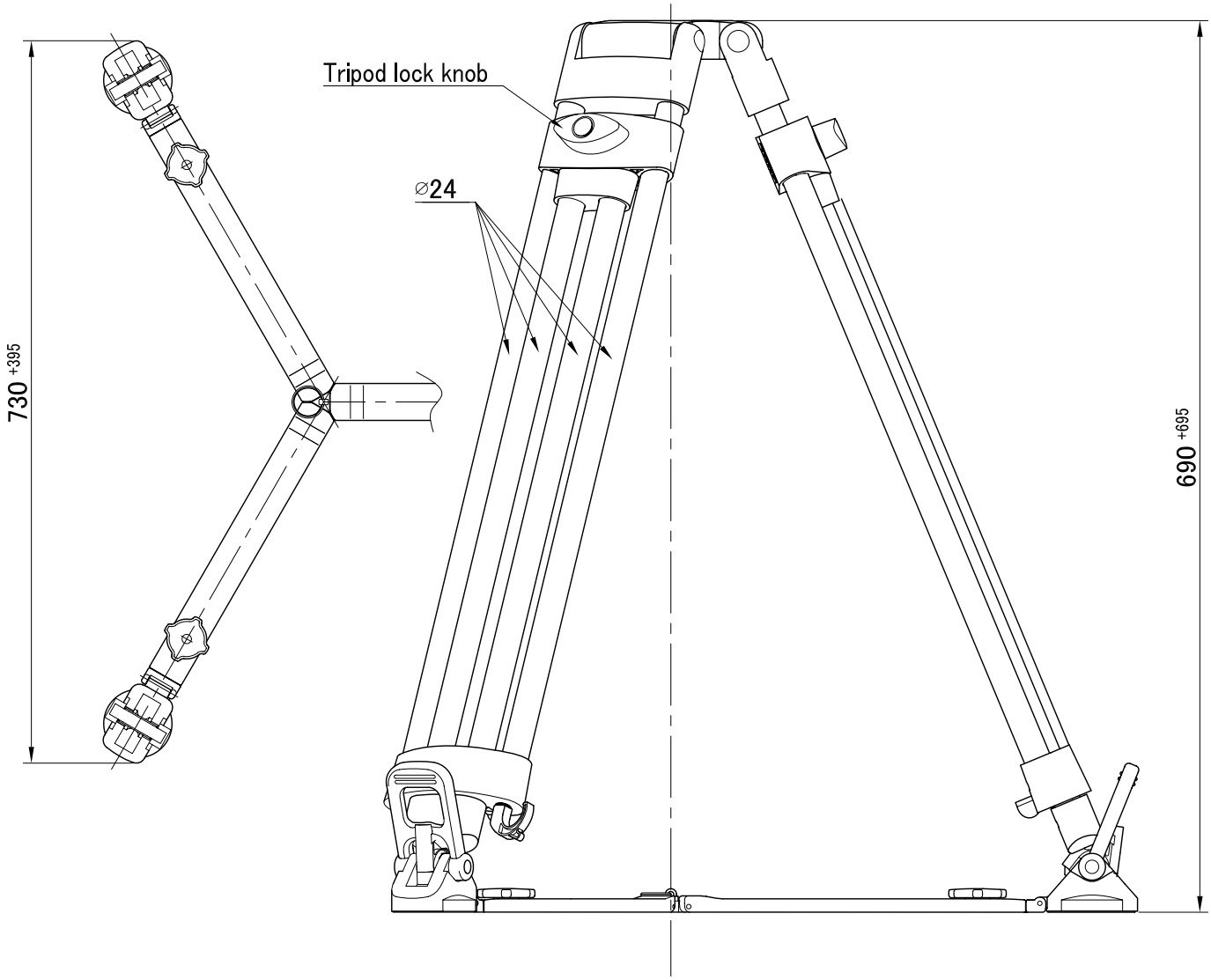

※:Reference

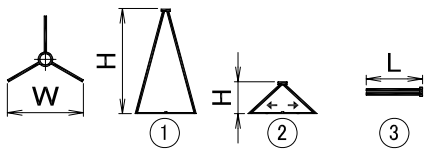

Manufacturer : HEIWA SEIKI KOGYO CO., LTD.
978-1, Nishibukuro, Yashio-City, Saitama, 340-0833 Japan TEL . +81-48-995-1301 FAX . +81-48-997-0804 http://www.libec.co.jp

1108
DWG.NO.:50-20002-E